Tohoku Univ. Technology

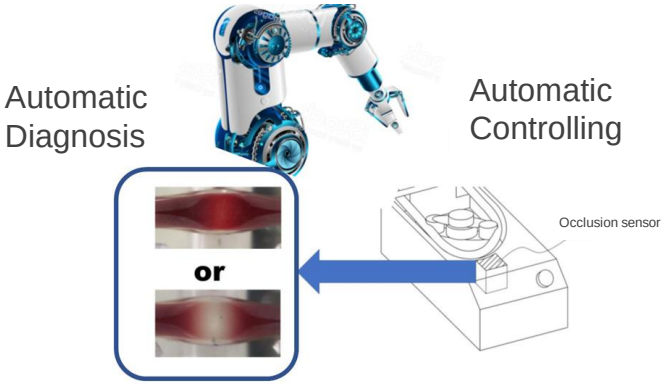

Occlusion measurement system

Solution for real-time monitoring and controlling of occlusion

Overview

Hemolysis is one of the major blood trauma in extracorporeal circulation. The occlusion is a parameter to eliminate deteriorative blood trauma as well as to improve assisted circulation efficacy during cardiopulmonary bypass (CPB). The strength of occlusion is adjusted manually in common method currently used, so the variation or deterioration of roller pumps or tubes causes hemolysis or multiple organ failure.

The present invention relates to a new occlusion simulation model for evaluating the occlusion by the thickness of the flow in the tubing compressed with the CPB roller and raceway. The red-colored densitometry images were used to calculate the thickness of occluded flow channel.

Occlusion measurement system

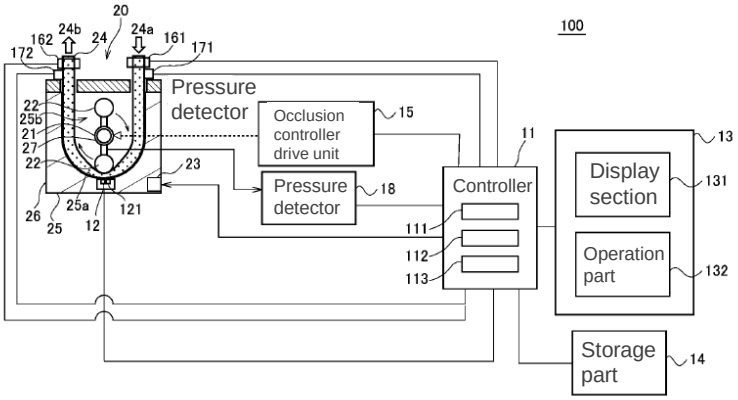

The red-colored densitometry image of tube 24 pressed by the roller 22 is used to calculate the occlusion. Drive control unit could control the thickness of flow channel so as to be an ideal occlusion.

Product Application

- Extracorporeal circulation apparatus
  (Artificial cardiopulmonary device, Dialysis device, etc.)
  - Control the strength of occlusion properly
  - Real-time monitoring of occlusion

Related Works

[1] 2020 Volume Annual58 Issue Abstract Pages 266
[2] Journal of Artificial Organs. 24(1):27-35. 2021.

IP Data

IP No.	:	特開2022-40976 （JP）
Inventor	:	T. Yambe, Y. Shiraishi, A. Fukaya, A. Yamada, Y. Inoue
Admin No.	:	T19-341

Contact

Tohoku Techno Arch Co., Ltd.
Please visit CONTACT here

Download OnePager

Contact
https://www.t-technoarch.co.jp/en/contact.html

Check Out Our Inventions
https://www.t-technoarch.co.jp/en/anken.php

Follow us
https://www.linkedin.com/company/tohoku-techno-arch

Leading you to Successful Industrialization

TOHOKU TECHNO ARCH
株式会社 東北テクノアーチ